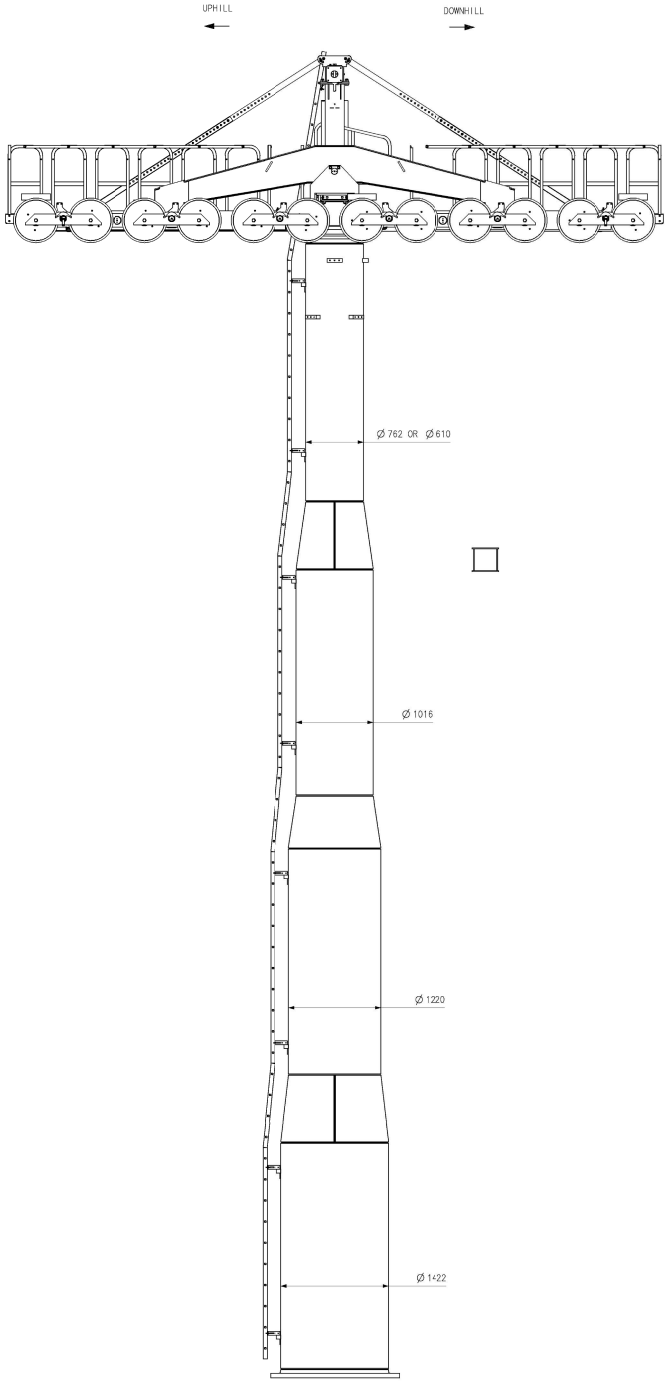

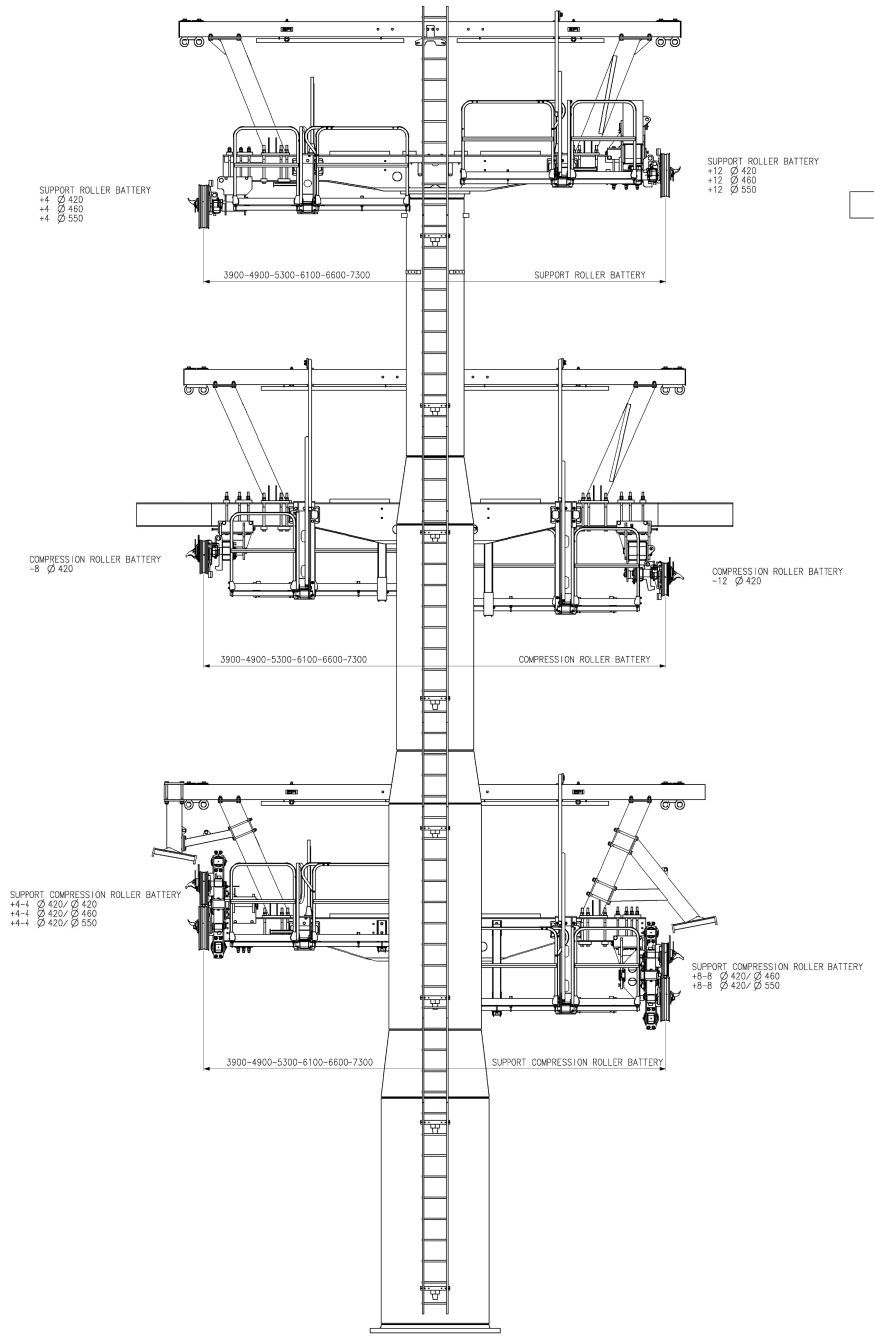

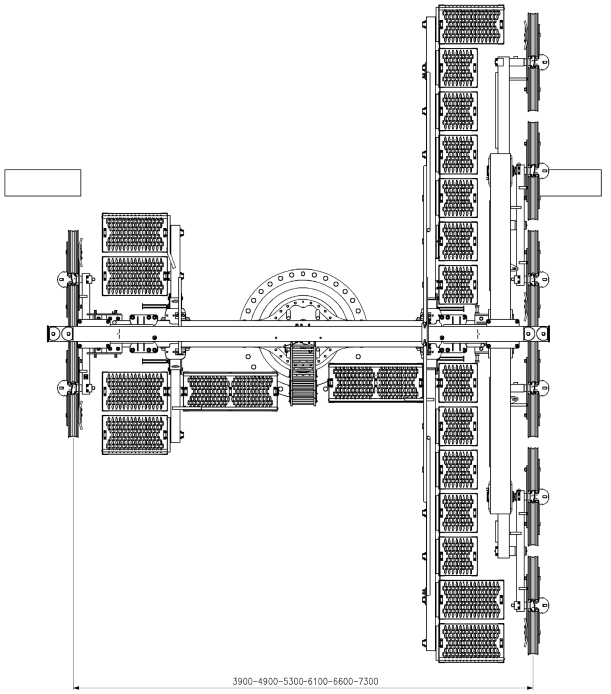

03	ADD LINE GAUGE 3900 AND ROLLER BATTERY Ø 420	17/11/08	BERCIN	TRIOLIER
02	ADD LINE GAUGE 6600	25/02/08	BERCIN	TRIOLIER
01	UPDATE DRAWING	23/07/07	BERCIN	TRIOLIER
REV.	DESCRIPTION	DATE	DRAWN BY	CHECKED BY
SPEC.				

CABLE PART
SUPPLIANTS A FUNE

DESCRIPTION LINE TOWER DRAWING CE2000/9/EG

DESCRIPTION DISEGNO SOSTEGNO DI LINEA CE2000/9/EG

DRAWING NO.	CE	SHEET SIZE A0	DRAWN BY / DISEGNATO DA: bercin	SCALE: 1:25	SHEET NO. / DATE: - Kg
LEITNER Advanced Technology Worldwide		DATE / DATA: 00-Jan-0	CHECKED BY / CONTROLLATO DA: triolier	ITEM NUMBER NUMERO ARTICOLO	96000034
		REVISION LEVEL / CIRCLE DI RIFERIMENTO: —	GENERAL TOLERANCES / TOLLERANCE GENERALI: —		

THIS DRAWING AND ITS DESIGN ARE THE PROPERTY OF LEITNER. REPLICATING DETAILS PERMISSION AND PROHIBITED.