SUN2000-100KTL-M1
Smart String Inverter

10 MPP Trackers | 98.8% (@480V) Max. Efficiency | String-level Management | Smart I-V Curve Diagnosis Supported

MBUS Supported | Fuse Free Design | Surge Arresters for DC & AC | IP66 Protection

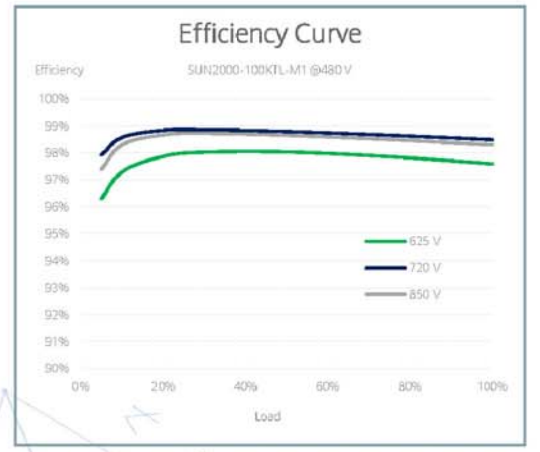

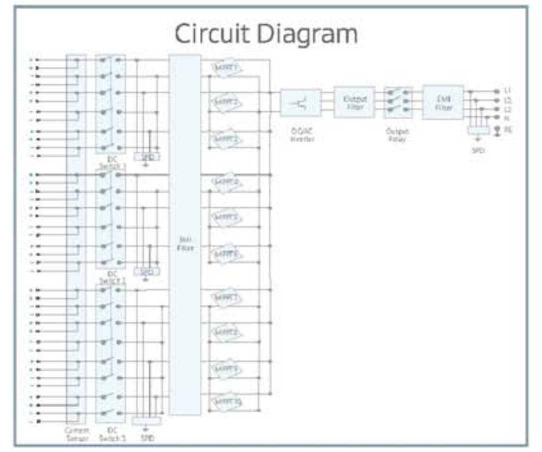

SUN2000-100KTL-M1
Technical Specifications

Efficiency	
Max. Efficiency	98.8% @480 V, 98.6% @380 V / 400 V
European Efficiency	98.6% @480 V, 98.4% @380 V / 400 V
Input	
Max. Input Voltage	1,100 V
Max. Current per MPPT	26 A
Max. Short Circuit Current per MPPT	40 A
Start Voltage	200 V
MPPT Operating Voltage Range	200 V ~ 1,000 V
Nominal Input Voltage	720 V @480 Vac, 600 V @400 Vac, 570 V @380 Vac
Number of Inputs	20
Number of MPP Trackers	10
Output	
Nominal AC Active Power	100,000 W
Max. AC Apparent Power	110,000 VA
Max. AC Active Power (cosφ=1)	110,000 W
Nominal Output Voltage	480 V/ 400 V/ 380 V, 3W+(N)+PE
Rated AC Grid Frequency	50 Hz / 60 Hz
Nominal Output Current	120.3 A @480 V, 144.4 A @400 V, 152.0 A @380 V
Max. Output Current	133.7 A @480 V, 160.4 A @400 V, 168.8 A @380 V
Adjustable Power Factor Range	0.8 LG ... 0.8 LD
Max. Total Harmonic Distortion	< 3%
Protection	
Input-side Disconnection Device	Yes
Anti-islanding Protection	Yes
AC Overcurrent Protection	Yes
DC Reverse-polarity Protection	Yes
PV-array String Fault Monitoring	Yes
DC Surge Arrester	Type II
AC Surge Arrester	Type II
DC Insulation Resistance Detection	Yes
Residual Current Monitoring Unit	Yes
Communication	
Display	LED Indicators, WLAN + APP
USB	Yes
MBUS	Yes (isolation transformer required)
RS485	Yes
General	
Dimensions (W x H x D)	1,035 x 700 x 365 mm (40.7 x 27.6 x 14.4 inch)
Weight (with mounting plate)	90 kg (198.4 lb.)
Operating Temperature Range	-25°C ~ 60°C (-13°F ~ 140°F)
Cooling Method	Smart Air Cooling
Max. Operating Altitude without Derating	4,000 m (13,123 ft.)
Relative Humidity	0 ~ 100%
DC Connector	Staubli MC4
AC Connector	Waterproof Connector + OT/DT Terminal
Protection Degree	IP66
Topology	Transformerless
Standard Compliance (more available upon request)	
Certificates	EN 62109-1/-2, IEC 62109-1/-2, EN 50530, IEC 62116, IEC 61727, IEC 60068, IEC 61683

SCHEDA TECNICA
INVERTER

SUNOVA SOLAR

SS-400-72M 72cells

380-400W

Management System

ISO 9001: Quality Management System
ISO 14001: Environmental Management System Standard
OHSAS 18001: International Occupational Health and Safety Assessment System Standard

Safety

Resistance to salt-spray corrosion (IEC61701, certified to **TÜVRheinland** test standard)

Resistance to ammonia Corrosion (IEC62716, certified to **TÜVRheinland** test standard)

Fire safety (Class C, certified to **TÜVRheinland** and Rheinland test standards)

Reliability

Resistance to power attenuation passed **TÜVRheinland** system voltage endurance test

High performance

Excellent power output of modules in low light environment

100% double EL test enabling remarkable reduction of hidden crack rate of modules

Product Guarantee

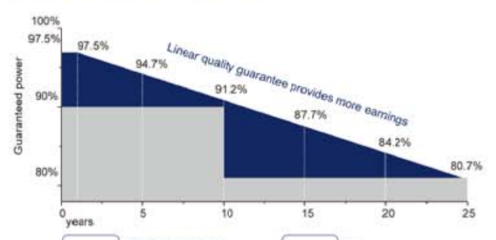

12 years Product quality & process guarantee

25 years Linear power guarantee

Product Certification

Product Insurance

PICC

Specifications are subject to change without prior notice

SUNOVA SOLAR — POWERING THE FUTURE

SS-400-72M 72cells

Electric characteristics

Model of modules	SS-380-72M		SS-385-72M		SS-390-72M		SS-395-72M		SS-400-72M	
	STC	NOCT	STC	NOCT	STC	NOCT	STC	NOCT	STC	NOCT
Maximum power– P_{mp} (W)	380W	286W	385W	290W	390W	294W	395W	298W	400W	302W
Open-circuit voltage–V_{oc} (V)	48.9V	47.5V	49.1V	47.7V	49.3V	48.0V	49.5V	48.2V	49.8V	48.5V
Short-circuit current–I_{sc} (A)	9.75A	7.88A	9.92A	7.95A	10.12A	8.02A	10.23A	8.09A	10.36A	8.16A
Maximum power voltage – V_{mp} (V)	40.5V	38.6V	40.8V	38.8V	41.1V	39.1V	41.4V	39.3V	41.7V	39.6V
Maximum power current – I_{mp} (A)	9.39A	7.42A	9.44A	7.48A	9.49A	7.54A	9.55A	7.60A	9.60A	7.66A
Module efficiency– η_m (%)	19.16%		19.42%		19.67%		19.92%		20.17%	

STC : Irradiance 1000 W/m², 25℃, AM1.5 NOCT: Irradiance 800 W/m², 20℃, wind velocity 1m/s

Power tolerance (W)	(0,+3)
Maximum system voltage (V)	1000V/1500V
Maximum rated fuse current (A)	20

Electrical Performance & Temperature Dependence

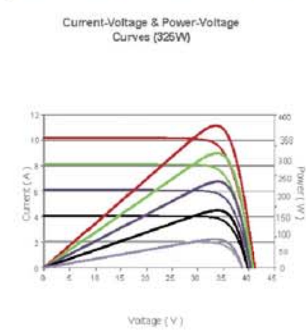

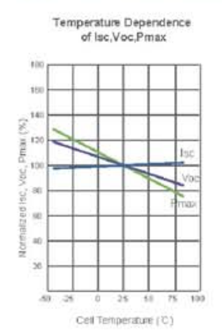

Engineering Drawings

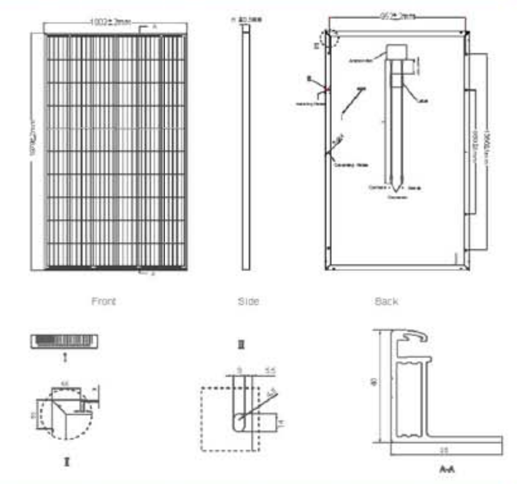

Temperature characteristics

Temperature coefficient at maximum power	-0.37 %/°C
Temperature coefficient of Voc	-0.28 %/°C
voltage Temperature coefficient of Isc	+0.048%/°C
current Operating temperature	-40~+85°C
Rated operating temperature of cells	45±2°C

Packaging Configuration

Container	20GP	40HC
Quantity/pallet	26	27
Pallets/container	10	22
Quantity/container	260	660

Structural characteristics

Module dimensions	1979 x 1002 x 40mm
Weight	22.5 kg
Cell	Mono PERC 158.75×158.75mm
Glass	3.2mm AR tempered
Frame	Anodized aluminum alloy
Junction box	IP67
Output wire	4.0 mm², wire length: 1200mm or Customized Length
No of cells	72(6x12)
Mechanical load	5400 Pa

Specifications are subject to change without prior notice

SUNOVA SOLAR — POWERING THE FUTURE

SCHEDA TECNICA
MODULI FOTOVOLTAICI

COMUNE DI ATESSA
(Prov. di Chieti)

Piazza Municipio, 1 - 66041 - ATESSA
Tel./Fax 0872-850421/0872-850413
Cod. Fisc. 81000470690 - p. IVA 00107790693

e-mail:info@comunediatessa.it

REGIONE ABRUZZO

SOGGETTO PROPONENTE: Società Agricola Carpineto Sinello SRL
Via Nazario Sauro, 1 - 64021 - Giulianova (TE)
Tel./Fax 0522232331/0522232333 Cod. Fisc./p. IVA 01767230673

Oggetto:

REALIZZAZIONE AMPLIAMENTO IMPIANTO FOTOVOLTAICO PER UNA POTENZA DI 1,71210 MWp alla Località "CASTELLUCCIO" (progetto Atessa 2)

VERIFICA DI ASSOGGETTABILITA' AMBIENTALE - V.A.
(art. 19 D.Lgs. 152/2006)

PROGETTO DEFINITIVO
SCHEDE TECNICHE MODULI FOTOVOLTAICI E INVERTER

Il Soggetto Proponente
(Società Agricola Carpineto Sinello SRL)

Il Progettista
(Prof. Ing. Giacomo Bizzarri)

Il Tecnico incaricato ai fini autorizzativi
(Dott. Ing. Antonio Scutti)

STUDIO TECNICO DI INGEGNERIA
Dott. Ing. Antonio SCUTTI
Contrada Tomassuoli, 46 – 66040 PERANO (Ch)
Codice Fiscale SCT NTN 54A02 A235I ● Partita IVA 00643420698
Tel./fax. 0872/898020
Personal 337 632986 – 329 9785442
E-mail: antonioscutti@alice.it

DATA 30/01/2020

SCALA

TAVOLA 6

Rev.	Data	Note	Rif. Documento
00	30/01/2020	VERIFICA DI ASSOGGETTABILITA' AMBIENTALE – V.A.	AS_M_ATES_01_20

QUESTO DISEGNO E' DI PROPRIETA' DELL'ING. ANTONIO SCUTTI CHE NE VIETA, A TERMINI DI LEGGE, LA RIPRODUZIONE SENZA ESPLICITA AUTORIZZAZIONE